PART NO. DCAG-17

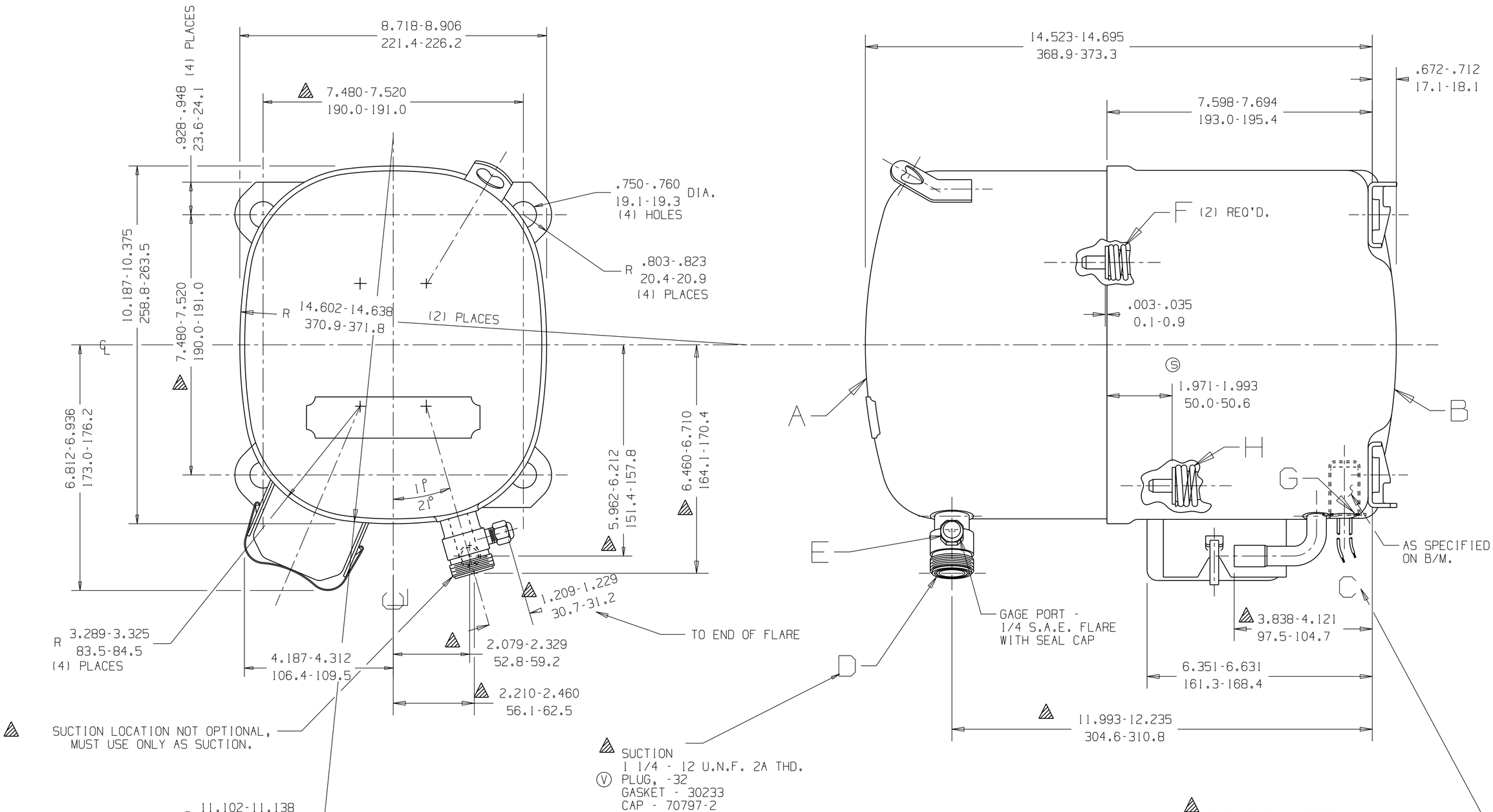

NOTE !

1. IF SPECIFIED ON BILL OF MATERIAL ASSEMBLE THESE PARTS AS SHOWN.
2. PLACEMENT OF HEATER LEADS - THRU BOTTOM HOLE IN FENCE ON COMPRESSOR WITH COVER, OR THRU BALE STRAP HOLE ON COMPRESSOR WITHOUT COVER.

DIMENSIONING : INCHES / MILLIMETERS OR INCHES - (MILLIMETERS)

O.A. SYMBOLS
✱ : CATEGORY I
▲ : CATEGORY II
■ : CATEGORY III
: CATEGORY IV

AG

MANUFACTURING NOTES !

1. SEE DWG. #AHT-17 FOR ASS'Y. OF DISCH. CONN. TUBE & LOWER SHOCK LOOP IN LOWER HOUSING.
2. SEE SPEC. "A-B" & "A-C" FOR PROCESSING.

G	28080-3	A	HA605-18		T.M.G 300CT06			T.M.G 12DEC01			T.M.G 2/10/98	A.S.C. 5/11/90	A.S.C. 6/1/89	J.F.J. 8/24/88	J.F.J. 8/13/88	HB 5-1-87
H	26222-1	B	HA604-7					#241151-000 WAS HA605-8 REVISED TO V16			#232836-002 WAS PLUG -9	#221617 WAS 3003	#219823 ADDED O.A. SYMBOLS	#217685 WAS 1.938-1.960	#217685 WAS 26222	REDRAWN - NO CHANGE #212377
		C	34602		EC2352 LOWER HOUSING WAS - 7											
		D	40518-2													
		E	70969			5A		5A			5B	6 A	-	02	02	-
		F	26223			X		W			V	U	T	S	R	P
										APR.	CK.					

LT	LC	CHANGE	DATE

THIS DRAWING OR PRINT (IIIS THE PROPERTY OF TECUMSEH PRODUCTS. COMPANY AND CONTAINS PROPRIETARY AND CONFIDENTIAL INFORMATION BELONGING TO TECUMSEH. IT IS LOANED TO THE RECIPIENT ON THE EXPRESS AND IMPLIED CONDITIONS THAT THE RECIPIENT WILL NOT USE IT NOR THE INFORMATION CONTAINED THEREON OR ANY INFORMATION GAINED THEREFROM FOR ANY PURPOSE OTHER THAN THAT FOR WHICH IT IS LOANED WITHOUT THE EXPRESS AND SPECIFIC WRITTEN CONSENT OF TECUMSEH AND THAT SUCH INFORMATION WILL NOT BE DISCLOSED TO OTHERS IN WHOLE OR IN PART EXPRESSLY AND SPECIFICALLY PROHIBITED WITHOUT THE EXPRESS AND SPECIFIC WRITTEN CONSENT OF TECUMSEH. THIS DRAWING (IIIS SHALL NOT BE COPIED IN WHOLE OR IN PART IN ANY MANNER OR TO ANY EXTENT WITHOUT THE EXPRESS AND SPECIFIC WRITTEN CONSENT OF TECUMSEH. THIS DRAWING (IIIS AND ALL OTHER DRAWINGS, SPECIFICATIONS, MODELS, PATTERNS, ETC. (IIII SHALL NOT BE RETURNED BY THE RECIPIENT UNLESS SPECIFICALLY REQUESTED BY THE RECIPIENT LATER'S REQUEST PROMPTLY AFTER SUCH REQUEST IS MADE.

DIS.CODE

DO NOT SCALE THIS DRAWING. ALL DIMENSIONS MATERIALS MUST NOT BE MAGNETIZED AS RECEIVED OR AS ASSEMBLY. COPPER OR ASSEMBLY.

NAME: SALES COMPRESSOR

DWN.	CK.	APR.	SCALE	THIS PRINT SUPERSEDES ALL PRINTS PRIOR TO
BRODERICK 5-1-87	W.F.M 5/11/90	BLANDEN 5/11/90	1/2"=1"	

TECUMSEH PRODUCTS CO.
TECUMSEH, MICHIGAN

MATERIAL: NOTED

PART NO. DCAG-17

BANNER